EPS/TPS Series
Digital Power Controllers
Manual

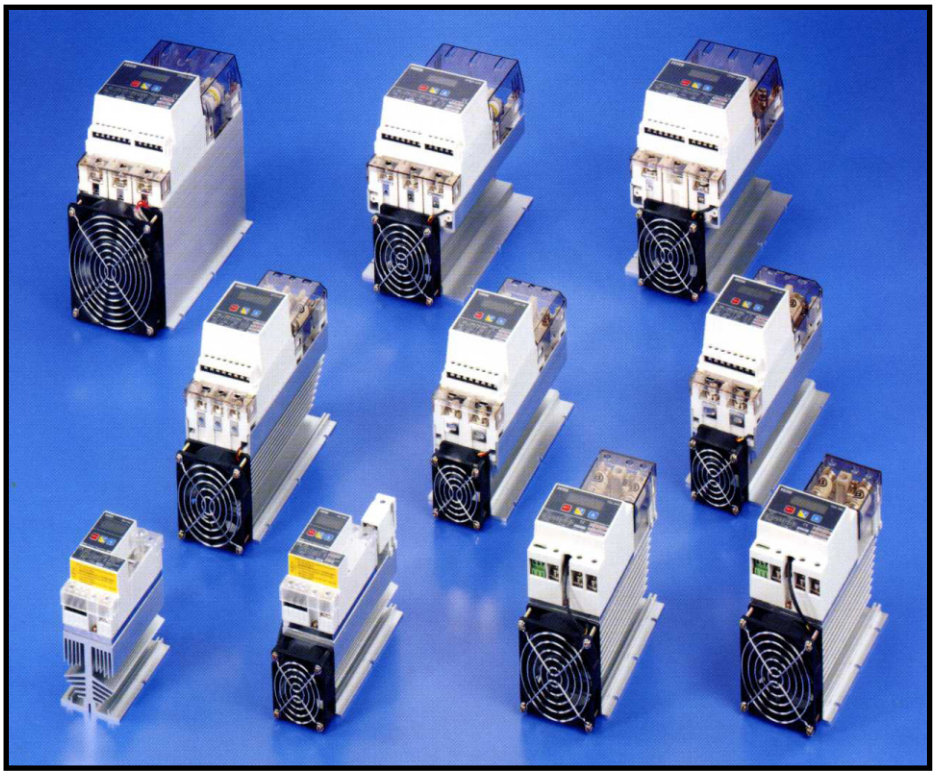

- *Multi-input type selectable*
- *Multi-dialog alarm function*
- *Cooling fan malfunction detection*
- *Auto output or manual output selectable*
- *High and low output limit settable*
- *Soft-start / kick start time settable*
- *Power frequency 50/60Hz auto-detect*
- *Zero cross control or phase control selectable*

【EPS series】 (Single Phase 1 and 2 Poles)

EPS1-40 EPS1-60 EPS1-80 EPS1-100

Model	EPS2-40	EPS2-60	EPS2-80	EPS2-100	EPS2-125	EPS2-150
Rated current	40A max.	60A max.	80A max.	100A max.	125A max.	150A max.
Protection fuse	40A.	63A.	80A.	100A.	125A.	160A.
Surge current duration	410A	1200A	1500A	1600A	2000A	2250A
Min. block voltage	600VAC	800VAC		1600VAC		
Cooling fan	60x60 / 12VDC		80x80 / 12VDC			
Main power supply	180 - 440VAC 50/60Hz ; 280 - 550 VAC 50/60Hz					
Aux. power supply	110/220 VAC ± 20% 50/60 HZ					

EPS3

【EPS series】 (Three Phase 3 Poles)

Model	EPS3-40	EPS3-60	EPS3-80
Rated current	40A max.	60A max.	80A max.
Protection fuse	40A.	63A.	80A.
Surge current duration	410A	1200A	1500A
Min. block voltage	600VAC	800VAC	
Cooling fan	80x80 / 12VDC		
Main power supply	180 - 440VAC 50/60Hz ; 280 - 550 VAC 50/60Hz		
Aux. power supply	110/220 VAC ± 20% 50/60 HZ		

【TPS series】 (Three Phase 3 Poles)

Model	TPS3-40	TPS3-60	TPS3-80	TPS3-100	TPS3-125	TPS3-160	TPS3-200
Rated current	40A max.	60A max.	80A max.	100A max.	125A max.	160A max.	200A max.
Protection fuse	40A.	63A.	80A.	100A.	125A.	160A.	200A.
Surge current duration	500A	1000A	1500A	1600A	2000A	2250A	5400A
Min. block voltage	1600VAC						
Cooling fan	80 x 80 / 12VDC			120 x 120 / 230VAC			
Main power supply	180 - 440VAC 50/60Hz ; 280 - 550 VAC 50/60Hz						
Aux. power supply	110 VAC ± 20% 50/60 HZ						

TPS3

◆ General data

Leakage current	25 mA max.
Surge resistance	Over 4KV
Noise resistance	± 2KV / 1 μs
Input method	4~20mA / 0~20mA / 1~5V / 2~10V / 0~5V / 0~10V or VR-10kΩ selectable
Control method	Zero cross control or phase angle control selectable ; Excluding EPS2-□□□ & TPS2-□□□, Phase Fired
Output control	Auto output or manual output selectable
Output range	0 ~ 100%
Input resolution	0.39%
Output low limit	0 ~ 100% (L.000 ~ L.100) settable
Output high limit	0 ~ 199% (H.000 ~ H.199) settable
Soft start	0 ~ 199 sec (t. 00 ~t.199) settable
Dielectric strength	Over 2.5KV
Isolation strength	Over 100MΩ / 500VDC
Operating temp	- 20℃ ~ + 80℃ ; 35 ~ 85%RH
Housing material	Intensive PC+ABS (UL-94V0)

◆ Function setting

Press Set Key and then ↓(Down Key); hold both keys for 3 Seconds

Status	Symbol	Description
Running status	A.100	1> Running status / 2> 「A」 : Output volume / 3> 「i」 : Output current volume (0.0~ i) / 4> 「n」 : Manual output volume /
Press SET & ▽ ↓ Key 3 sec **Setting of lock**	LcK.0	1> 「Lck = 0」 : All lock / 2> 「Lck =1」 : Data settable / 3> 「Lck = 2」 : Unlock /
Press SET Key ↓ **Selection of display**	A.050	1> 「A」 : Output volume (0~100%) / 2> 「i」 : Output current volume (0.0~ i) / 3> 「n」 : Manual output volume (0~100%) /
Press SET Key ↓ **Selection of input**	Int.0	1>Input type selection : Int.0 ~ Int.6 2> 「Int.0」 = 【4 ~ 20mA】 ; 「Int.1」 = 【0 ~ 20 mA】 ; 「Int.2」 = 【1 ~ 5V】 「Int.3」 = 【2 ~ 10V】 ; 「Int.4」 = 【0 ~ 5V】 ; 「Int.5」 = 【0 ~ 10V】 「Int.6」 = Variable resistance (10kΩ) /
Press SET Key ↓ **Selection of control method**	Con.0	1> 「Con.0」 : Zero cross control / 2> 「Con.1」 : Phase control /
Press SET Key 3 sec ↓ **Selection of start method**	Str.0	1> 「Str.0」 = Soft start / 2> 「Str.1」 = Kick start /
Press SET Key		

◆ Data setting /

Press Set Key; hold for 3 Seconds

Status /	Symbol /	Description /
Volume of Output or input	A.100	1> Running status / 2> 「A」 : Output volume / 3> 「i」 : Output current volume (0.0~ i) / 4> 「n」 : Manual output volume /
Press SET ↓ Key 3 sec **Setting of min. output**	L.000	1>Range : 0 ~ 100 2>Min. output volume setting /
Press SET Key ↓ **Setting of max. output**	H.100	1>Range : 0 ~ 199 2> Max. output volume setting /
Press SET Key ↓ **Setting of Max. load current**	I.99.9	1>Range : 0.0~99.9 2>Max. load current setting /
Press SET Key ↓ **Setting of start time**	t.010	1>Range : 0 ~ 199 sec 2>Time of soft start / Time of kick start /
Press SET Key 3 sec ↓ **Setting of Input offset**	F.000	1>Range : - 99 ~ 99 2>Setting of Input offset /
Press SET Key		

Additional Items:

d.099 : When the Output Volume is > d.0nn, It Starts The Soft Start Function

ALn.O → Alarm output status is Normally Open (NO); ALn.1 → Alarm output status is Normally Closed (NC)

EPS2-40 / EPS2-60

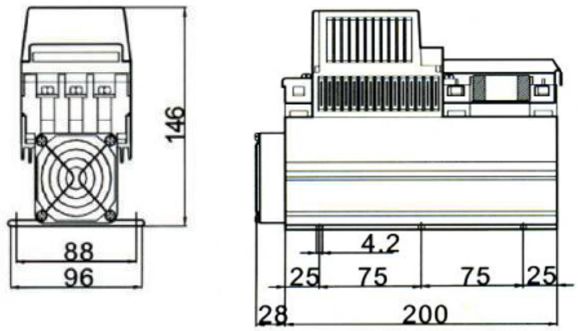

TPS3-40 / TPS3-60 / TPS3-80

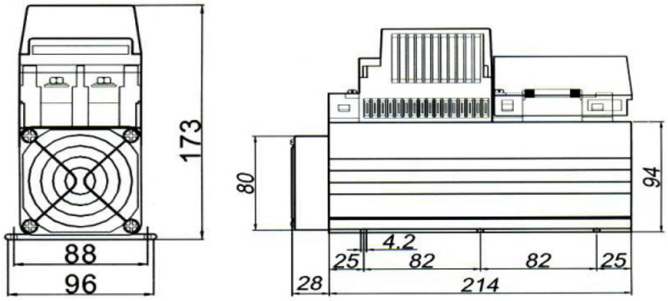

EPS2-80 EPS2-100 / EPS3-40 / EPS3-60 EPS3-80

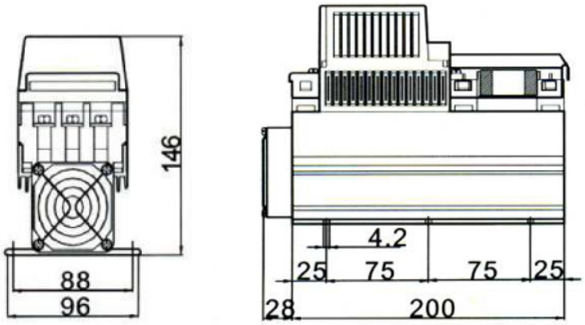

TPS3-100 TPS3-125 / TPS3-160 TPS3-200

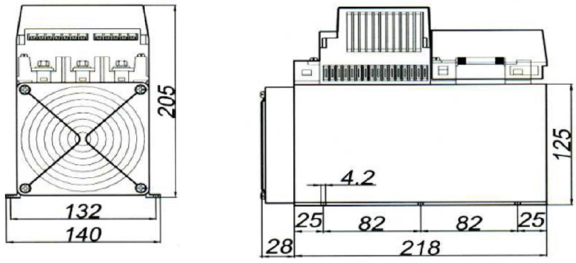

EPS2-150

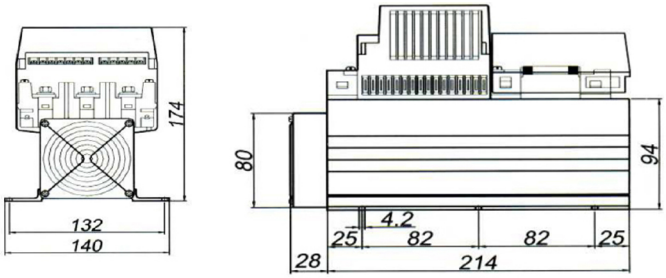

EPS □ □□□

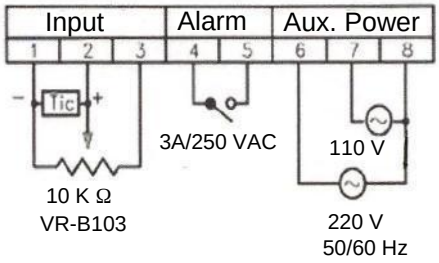

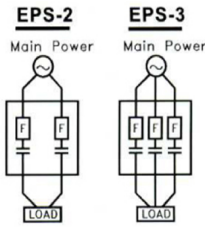

TPS□ □□□

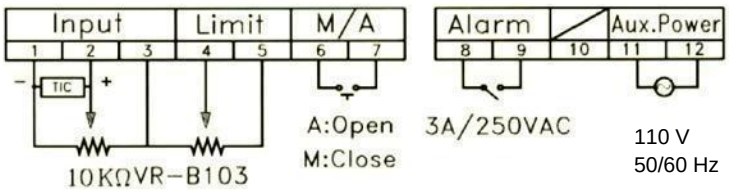

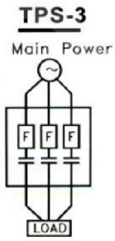

◆ Type of Control Method

Control Method		Phase angle control	Zero cross control
Output volume	10 %	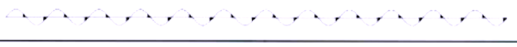	
	25 %		
	50 %		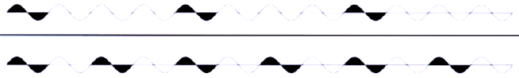
	75 %		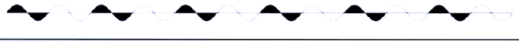
Feature		1. Suited to control the inductive load orThe variable resistance load (IR,Pure metal heater, Silicone carbonate heater or Transformer) 2. The power factor cosθ <1 3. Higher harmonic noise	1. Suited to control the constant resistance load or The capacity load. (Alloy heater or Capacitor) 2. The power factor cosθ =1 3. Lower harmonic noise

◆ Soft start /

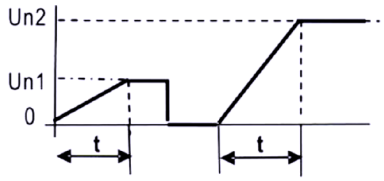

◆ Kick start /

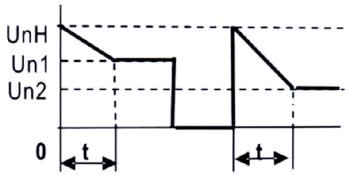

t : Soft or kick start time
Un or Un2 : Output volume
UnH : Maximun output volume (H)

◆ Setting of manual output /

Manual output status	Description
n.000	1.On the 「manual」 output status, Press △ or ▽ key to change the manual output vomlune 2.Press SET to finish setting

◆ Setting of output limit /

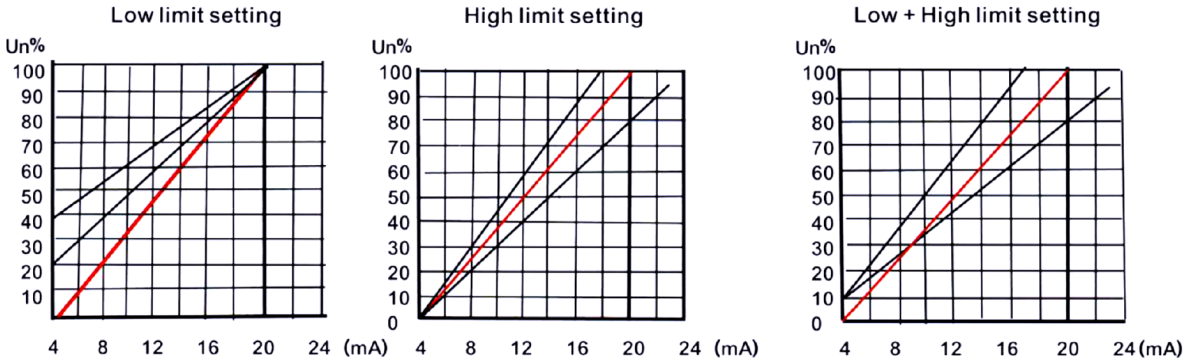

1>A : Low limit = 0 ; High limit = 100
2>B : Low limit = 20 ; High limit = 100
3>C : Low limit =40 ; High limit = 100

1>A : Low limit = 0 ; High limit = 100
2>B : Low limit = 0 ; High limit = 80
3>C : Low limit =40 ; High limit = 120

1 >A : Low limit = 0 ; High limit = 100
2>B : Low limit =10 ; High limit = 80
3>C : Low limit =10 ; High limit = 120

Note :

1> 「Un」 :Output ratio
2> Setting range : Low limit = 0 ~ 100% , High limit = 0 ~ 199% /
3> Low + high limit setting is suited to control the radial heating heater such as IR lamp.

◆ Multi-input type /

* 【Int.0】: 4 ~ 20 mA * 【Int.1】: 0 ~ 20 Ma * 【Int.2】: 1 ~ 5 V * 【Int.3】: 2 ~ 10 V
* 【Int.4】: 0 ~ 5 V * 【Int.5】: 0 ~ 10 V * 【Int.6】: VR / 10KΩ (103KB)

◆ External limit for output volume 【EPS & TPS series】

Please use a Variable resistance (10kΩ/103KB) to adjust the maximum output volume.
(10kΩ/103KB)

◆ Trouble shooting /

Alarm	Description /	Checking /
【nPEr】	Fuse break or phase loss	Please check load or power supply
【FnEr】	Cooling fan malfunction	Please check the cooling fan
【OhEr】	Over heat (120℃)	Please improve cooling condition

◆ Notice of safety /

Warning	Potentially hazardous situation, if mishandling, may result in death or serious injury.

1) Please confirm the input type and connection method with this controller, if not, it may result in malfunction.

2) Please do not touch any terminal of this controller while power supply is supplied, if do, it may result in electronic shock.

3) 「Power supply system」 must to be shutdown before renew the fuse, if not, it may result in electronic shock.

4) Please rated the load current within the specified value, if not, it may result to burn up this controller or fuse.

5) Please tighten the screw terminal over 100kg-cm, if not, it may result to burn up this controller or fuse.

6) If this controller is burned up, it may be in short circuit condition or malfunction, please settle an independent alarm system to ensure safety protection, if not, it may result in a serious accident.

Specifications may be modified without notice in advance.